#014600

6” Suspension System

1987-1995 Jeep YJ

READ AND UNDERSTAND ALL INSTRUCTIONS AND WARNINGS PRIOR TO INSTALLATION OF SYSTEM AND OPERATION OF VEHICLE.

SAFETY WARNING

BDS Suspension Co. recommends this system be installed by a professional technician. In addition to these instructions, professional knowledge of disassembly/ reassembly procedures and post installation checks must be known.

PRODUCT SAFETY WARNING

Certain BDS Suspension products are intended to improve off-road performance. Modifying your vehicle for off-road use may result in the vehicle handling differently than a factory equipped vehicle. Extreme care must be used to prevent loss of control or vehicle rollover. Failure to drive your modified vehicle safely may result in serious injury or death. BDS Suspension Co. does not recommend the combined use of suspension lifts, body lifts, or other lifting devices.

You should never operate your modified vehicle under the influence of alcohol or drugs. Always drive your modified vehicle at reduced speeds to ensure your ability to control your vehicle under all driving conditions. Always wear your seat belt.

PRE-INSTALLATION NOTES

1. Special literature required: OE Service Manual for model/year of vehicle. Refer to manual for proper disassembly/reassembly procedures of OE and related components.
2. Adhere to recommendations when replacement fasteners, retainers and keepers are called out in the OE manual.
3. Larger rim and tire combinations may increase leverage on suspension, steering, and related components. When selecting combinations larger than OE, consider the additional stress you could be inducing on the OE and related components.
4. Post suspension system vehicles may experience drive line vibrations. Angles may require tuning, slider on shaft may require replacement, shafts may need to be lengthened or trued, and U-joints may need to be replaced.
5. Secure and properly block vehicle prior to installation of BDS Suspension components. Always wear safety glasses when using power tools.
6. If installation is to be performed without a hoist, BDS Suspension Co. recommends rear alterations first.
7. Due to payload options and initial ride height variances, the amount of lift is a base figure. Final ride height dimensions may vary in accordance to original vehicle attitude. Always measure the attitude prior to beginning installation.

POST-INSTALLATION WARNINGS

1. Check all fasteners for proper torque. Check to ensure for adequate clearance between all rotating, mobile, fixed, and heated members. Verify clearance between exhaust and brake lines, fuel lines, fuel tank, floor boards and wiring harness. Check steering gear for clearance. Test and inspect brake system.
2. Perform steering sweep to ensure front brake hoses have adequate slack and do not contact any rotating, mobile or heated members. Inspect rear brake hoses at full extension for adequate slack. Failure to perform hose check/ replacement may result in component failure. Longer replacement hoses, if needed can be purchased from a local parts supplier.
3. Perform head light check and adjustment.
4. Re-torque all fasteners after 500 miles. Always inspect fasteners and components during routine servicing.

102 S. Michigan Avenue • Coldwater, MI 49036
517-279-2135 • www.bds-suspension.com

rev. 2/9/2006

PARTS LIST

Part #	Qty	Description
3624RB	16	Bushing
3625RB	8	Shackle Bushing
15-1	4	0.750 x 0.083 x 2.950 Sleeve
37-1	8	0.750 x 0.109 x 2.985 Sleeve
2124	4	4° Shim
2126	2	6° Shim
65077	1	1/8" x 1-1/4" Cotter Pin
560312FCP	2	Center Pin
N12FH	16	1/2" Fine High Nut
W12S	16	1/2" SAE Flat Washer
906	1	Bolt Pack
907	1	Bolt Pack
01315	1	Front Track Bar Bracket
01308	2	Shock Stem Eliminator
YJBS	4	Bump Stop
122120634R	6	1/2" x 2-1/2" x 7" Round U-bolt
123250700R	2	1/2" x 3-1/4" x 7" Round U-bolt
084404R	1	Pitman Arm
905	1	Hanger Bolt
910	2	Shackle Bolt Pack
01366-1	4	Front Shackle Plate
01355-1	4	Center Sleeve
01367-1	4	Rear Shackle Plate
22510	2	Front Brake Line
22513	1	Rear Brake Line
5188	3	Snap-in Brake Line Clip
B06103C	3	Brake Line Bracket
CCW-03-050	4	3/8" Brake Line Crush Washer
099000	3	Zip Tie
01300	2	Disconnect End
01301	2	Disconnect Collar
034001	2	Disconnect Spring
68016	2	Retaining Ring
SB34R3	2	Hourglass Bushing
01305	2	Link Adapter
01316	2	Lanyard
01317	2	Clip
367	2	0.750 x 0.058 x 1.375 Sleeve

BOLT PACK 729

Qty	Description
2	9/16"-12 x 3" bolt grade 8 yellow zinc
2	9/16"-12 prevailing torque nut yellow zinc
4	9/16" SAE flat washer thru-hardened yellow zinc
2	1/2"-20 hex serrated flange nut
2	1/2"-20 hex jam nut clear zinc
2	#10-16 x 5/8" self-drilling screw

BOLT PACK 905

Qty	Description
4	9/16"-12 x 4 1/2" bolt grade 8 yellow zinc
4	9/16"-12 prevailing torque nut yellow zinc
8	9/16" SAE thru-hardened washer yellow zinc

BOLT PACK 906

Qty	Description
2	3/4"-10 prevailing torque nut clear zinc
2	3/4" SAE flat washer clear zinc
2	1/2"-13 x 2-1/2" bolt grade 5 clear zinc
2	1/2"-13 prevailing torque nut clear zinc
4	1/2" SAE flat washer clear zinc

BOLT PACK 907

Qty	Description
1	12mm-1.75 x 60mm bolt class 10.9 clear zinc
1	12mm-1.75 x 70mm bolt class 10.9 clear zinc
4	7/16" USS flat washer clear zinc
2	12mm-1.75 prevailing torque nut clear zinc
2	7/16" SAE flat washer thru-hardened yellow zinc
1	7/16"-14 x 1-1/4" bolt grade 8 yellow zinc
1	7/16"-14 prevailing torque nut yellow zinc

BOLT PACK 910

Qty	Description
6	1/2"-13 x 4-1/2" bolt grade 8 yellow zinc
6	1/2"-13 prevailing torque nut yellow zinc
12	1/2" SAE flat washer thru hardened yellow zinc

INSTALLATION INSTRUCTIONS

Note: *This kit includes new braided stainless steel brake lines. Installation of these lines requires the entire brake system to be bled following the completed installation and prior to operating the vehicle. Consult your owner's manual for the proper brake fluid to use for your vehicle. Fluid is not included in this kit.*

FRONT INSTALLATION

1. Park the vehicle on a clean, flat surface and block the rear wheels for safety.
2. Disconnect the front track bar from the axle. Retain hardware.
3. Raise the front of the vehicle and support with jack stands under the frame rails just behind the front spring hangers.
4. Remove the wheels.
5. Disconnect the drag link from the pitman arm. Remove the cotter pin and nut. Free the tie rod end taper using a pickle fork. Retain nut.
6. Remove the nut and washer mounting the pitman arm to the steering box. Remove the pitman arm from the steering box using a pitman arm puller. Note the indexing of the pitman arm before removal.
7. Install the new pitman arm on the steering box in the same orientation as the OE was taken off. Fasten with the OE nut and washer. Torque nut to 185 ft-lbs.
8. Disconnect the driver's side front rubber brake hose from the frame. Disconnect the hose from the steel fitting at the frame and the brake caliper. Retain banjo bolt removed at the brake caliper.
9. Ensure that the old crush washer is removed from the caliper and that the brake line mounting surface is clean. Attach the new brake line to the caliper using two new crush washers on each side of the hose fitting and the OE banjo bolt. Tighten the banjo bolt to 20 ft-lbs. (Fig. 1)

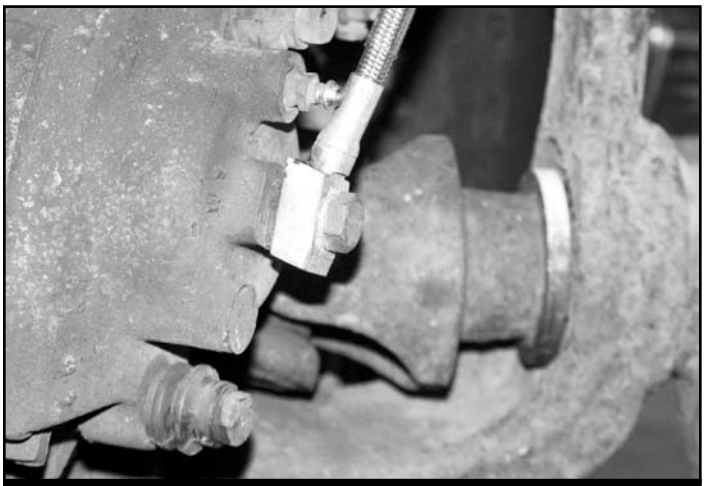

FIG. 1

10. Install the new brake line mounting bracket to the new hose and then attach the hose to the steel line at the frame. Attach the bracket to the frame in the original brake line mounting position with the OE bolt. Torque bolt to 18 ft-lbs. (Fig. 2)

FIG. 2

11. Retain the brake line to the new bracket with the provided brake line clip.
12. Repeat brake line installation on the passenger's side of the vehicle.
13. Support front axle with a hydraulic jack.
14. Remove the OE shocks. Discard the shocks and upper hardware. Retain the lower hardware.
15. Disconnect the sway bar links from the sway bar and spring plates. Retain all mounting hardware. The mount at the sway bar will require a pickle fork to release the tapered stud from the sway bar.
16. Remove the driver's side spring u-bolts and u-bolt plate. Discard the u-bolts and retain the u-bolt plate.
17. Remove the spring-to-shackle pivot bolt and the spring-to-hanger bolt and remove the spring from the vehicle. Discard hardware and spring.
18. Remove the shackle-to-frame pivot bolt and remove the shackle plates from the vehicle. Remove the OE frame shackle bushings. Discard hardware, bushings and shackles.
19. Apply grease to the new spring bushings (3624RB) and install in the new springs (004500). Grease one 37-1 sleeve (1/2" ID) and one 15-1 sleeve (9/16" ID). Install the 37-1 sleeve in the long end of the spring which is the end "004500" is printed. Install the 15-1 in the short end.
20. Apply grease to the new frame shackle bushings (3625RB) and install in the frame. Grease and install a 37-1 sleeve in the bushings.
21. Loosely install two new front shackle plates (straight) to the frame with a ½" x 4-1/2" bolt, nut and ½" SAE washers from bolt pack #910. The two closest holes in the plate will go toward the spring. Loosely install the shackle spacer in the middle holes on the shackle plate and retain with ½" hardware from bolt pack #910. (Fig. 3)

FIG. 3

22. Attach the spring to the shackles with a ½" x 4-1/2" bolt, nut and ½" SAE washers from bolt pack #910. Leave hardware loose. Be sure to attach the end of the spring with the small ID sleeve (at the end marked 004500).
23. Attach the spring to the hanger with a 9/16" x 4-1/2" bolt, nut and 9/16" SAE washers from bolt pack #905. Leave hardware loose.
24. Clean the spring mounting surface on the axle and lower the axle to the spring. Position the new bump stop on the axle tube and slide the new u-bolt over the tab on the bump stop. Install a 3-1/4" wide u-bolt over the differential housing and the 2-3/4" wide over the bump stop tab. Fasten the u-bolts with ½" high nuts and ½" SAE washers. Snug hardware. Final u-bolt torque will be down with the vehicle weight on the springs.
25. Repeat spring removal/installation on the passenger's side of the vehicle.
26. Temporarily attach the new track bar bracket to the axle with the 12mm x 60mm bolt, nut and 7/16" USS washers provided (BP #907). The offset in the plate will go up and the tab with a slotted hole will fit in between the casting webs.
27. Mark the location of the slotted hole using the bracket as a template. (Fig. 4A)

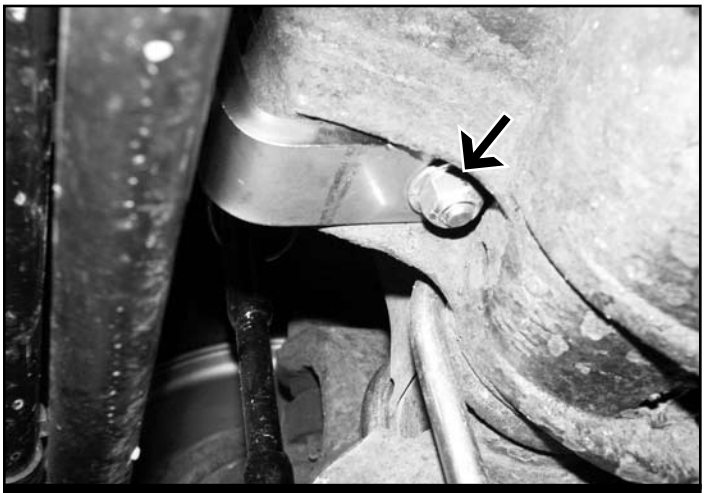

FIG. 4A

28. Remove the bracket and drill a 7/16" hole and the mark through the track bar axle mount. ***Note:*** *It may be necessary to disconnect the steering stabilizer from the axle to allow for drill clearance.*
29. Reattach the new bracket to the axle with the 12mm hardware. Also attach the bracket through the newly drilled hole with a 7/16" x 1-1/4" bolt, nut and 7/16" SAE washer (BP #907). Torque 7/16" and 12mm hardware to 50 ft-lbs. (Fig. 4B)

FIG. 4B

30. Install the new lower ball stud adapter to the OE sway bar link axle mount with a provided ½” flange nut (Fig 5). Rotate the bracket so it is straight up (ball stud up) and torque the nut to 65 ft-lbs.

FIG. 5

31. Lightly grease and install the provided hourglass bushings in the ends of the new sway bar links. Lightly grease and install the provided sleeves into the bushings.
32. Install the provided ½” jam nut then the spring loaded disconnect assembly on the threaded end of the new link. Thread the nut and assembly all the way on to the link (Fig 6).

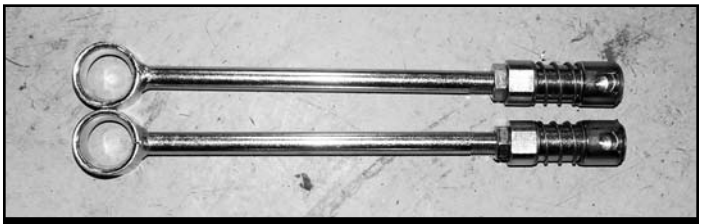

FIG. 6

33. Attach the sway bar link assembly to the sway bar with the provided 9/16” x 3” bolt, nut and 9/16” SAE washers, running from the inside out. Torque bolt to 75 ft-lbs. The sway bar link will mount to the outside of the sway bar (Fig 7).

FIG. 7

34. Ensure that the vehicle is setting level. Pull the spring collar up on the disconnect end and attach it to the ball stud (Fig 8). Make sure that the disconnect end stud hole is square with the ball stud and tighten the jam nut against the disconnect end. The disconnects allow for ½” of adjustment (1/2” longer from full-bottomed out). If necessary, adjust the links side-to-side to compensate for any unevenness in the vehicle allowing for the easiest possible disconnecting of the ends.

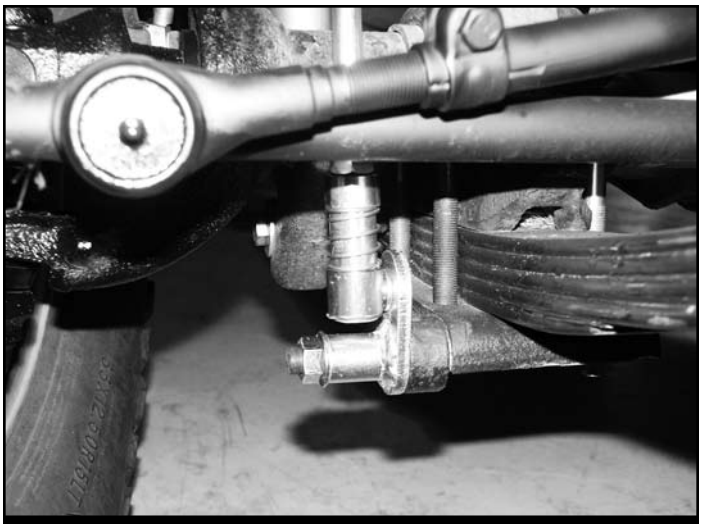

FIG. 8

35. Check the jam nuts to be sure they are securely locked off. Disconnect both end links and fold them up against the sway bar. Clip the provided lanyard/clip assembly around the sway bar/end link and find the best position for mounting the lanyard. This position will vary from vehicle to vehicle and with different suspension setups. Use your best judgment. Use the provided self-drilling screws to mount the lanyard to the body/frame.
36. With the lanyards installed reconnect the sway bar links to the axle. The lanyards can be reattached to themselves so that they remain out of the way of moving parts when not in use.
37. Attach the drag link to the pitman arm with the OE castellated nut and new cotter pin. Torque nut to 55 ft-lbs. DO NOT loosen nut in order to install the cotter pin.
38. Install the provided upper shock mount adapter to the shock with a 1/2" x 2-1/2" bolt, nut, and 1/2" SAE flat washers from bolt pack #906. Torque to 65 ft-lbs.
39. Install the new shocks using the OE lower hardware and new 3/4" nut and SAE washers from bolt pack #906 for the upper mount. Torque the lower hardware to 50 ft-lbs. and the upper to 100 ft-lbs.
40. Install the wheels and lower the vehicle to the ground.
41. Bounce the front of the vehicle to settle the suspension. Torque the u-bolts to 70-85 ft-lbs. Torque the 9/16” hanger bolts to 95 ft-lbs and ½” shackle bolts to 65 ft-lbs.
42. Attach the track bar to the track bar relocation bracket with a 12mm x 70mm bolt, nut and 7/16" USS washers from bolt pack #907. Turn the steering wheel to help align the holes. If necessary the track bar can be loosened at the frame to provided extra movement. Torque track bar bolts to 55 ft-lbs.

REAR INSTALLATION

1. Block the front wheels for safety.
2. Disconnect the track bar from the rear axle and frame mounts. It will not be reused.
3. Raise the rear of the vehicle and support with jack stands under the frame rails just ahead of the rear spring hangers.
4. Remove the wheels.
5. Disconnect the rubber brake hose from the steel brake line on the driver’s side frame rail.
6. Disconnect axle tube breather from the brake line junction block on the driver’s side axle tube. Disconnect the brake lines from the junction block. Disconnect the junction block from the axle by removing the breather bolt. Retain the breather bolt.

FIG. 9

7. Attach the axle brake lines to the new brake line junction block. Attach the junction block to the axle with the OE breather bolt. Torque bolt to 25 ft-lbs. Install breather hose. (Fig. 9)
8. Attach the new brake line to steel brake line at the driver's side frame rail.
9. Remove the OE shocks. Retain all mounting hardware.
10. Remove the driver's side spring u-bolts and u-bolt plate. Discard the u-bolts and retain the u-bolt plate.
11. Remove the spring-to-shackle pivot bolt and the spring-to-hanger bolt and remove the spring from the vehicle. Discard hardware and spring.
12. Remove the shackle-to-frame pivot bolt and remove the shackle plates from the vehicle. Remove the OE frame shackle bushings. Discard hardware, bushings and shackles.
13. Install the rear axle shims on the rear springs. Our testing has shown that the necessary angle change of the rear pinion varies slightly from vehicle to vehicle. When using a CV style rear driveshaft the pinion must run in-line with the driveshaft. Typically, 8° of shim are needed for proper angles. We have included provisions to run 10° and 6° for slightly heavier or lighter vehicles. Clamp the spring together and remove the center pin. Install the approvpriate shim combination with the provided 5/16" center pin so that the short end of the shims face the long end of the spring marked "004500".
14. Apply grease to the new spring bushings (3624RB) and install in the new springs (004500). Grease one 37-1 sleeve (1/2" ID) and one 15-1 sleeve (9/16" ID). Install the 37-1 sleeve in the long end of the spring which is the end "004500" is printed. Install the 15-1 in the short end.
15. Apply grease to the new frame shackle bushings (3625RB) and install in the frame. Grease and install a 37-1 sleeve in the bushings.
16. Loosely install two new rear shackle plates (curved) to the frame with a ½" x 4-1/2" bolt, nut and ½" SAE washers from bolt pack #910. The two closest holes in the plate will go toward the spring. The bend in the shackle will go down and toward the rear of the vehicle. (Fig. 10) Loosely install the shackle spacer in the middle holes on the shackle plate and retain with ½" hardware from bolt pack #910.

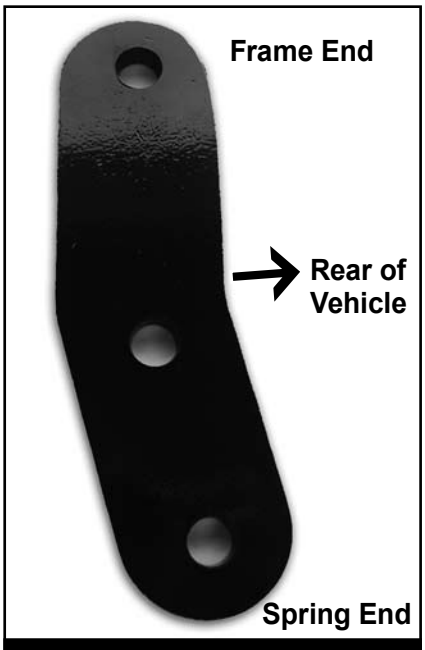

FIG. 10

17. Attach the spring to the shackles with a ½" x 4-1/2" bolt, nut and ½" SAE washers from bolt pack #910. Leave hardware loose. Be sure to attach the end of the spring with the small ID sleeve (the end marked 004500).
18. Attach the spring to the hanger with a 9/16" x 4-1/2" bolt, nut and 9/16" SAE washers from bolt pack #905. Leave hardware loose.
19. Clean the spring mounting surface on the axle and lower the axle to the spring. Be sure that the thick end of the shim is toward the front of the vehicle. Position the new bump stop on the axle tube and slide the new u-bolt over the tab on the bump stop. Fasten the u-bolts with ½" high nuts and ½" SAE washers. Snug hardware. Final u-bolt torque will be down with the vehicle weight on the springs. (Fig 11)

FIG. 11

20. Repeat spring removal/installation on the passenger's side of the vehicle.
21. Install the new shocks with the OE hardware. Torque shock hardware to 55 ft-lbs.
22. Install the wheels and lower the vehicle to the ground.
23. Bounce the rear of the vehicle to settle the suspension. Torque the u-bolts to 70-85 ft-lbs. Torque the 9/16" hanger bolts to 95 ft-lbs and ½" shackle bolts to 65 ft-lbs.
24. Attach front track bar to the new track bar bracket with the provided 12mm x 70mm bolt, nut, and 7/16" USS washers. Torque bolt to 50 ft-lbs.

POST-INSTALLATION

25. Bleed the entire brake system using the appropriate fluid (see owner's manual).
26. Check all hardware.
27. Check hardware after 500 miles.
28. Do a complete steering sweep to check for proper clearance of all suspension components. Use the provided zip ties to tie the brake lines out of the way if necessary.
29. Adjust head lights.
30. Adjust the steering wheel using the adjustment collar on the drag link at the pitman arm.
31. A front end alignment is recommended.
32. If rear driveline vibration occurs, adjust shims to bring the pinion more in-line with the driveshaft. This is done by removing, adding, or replacing shims.

Shock Absorber

Installation Instructions

READ AND UNDERSTAND ALL INSTRUCTIONS AND WARNINGS PRIOR TO INSTALLATION OF SYSTEM AND OPERATION OF VEHICLE.

LIMITED LIFETIME WARRANTY

BDS Suspension Co. warrants to the original retail purchaser that its shock and stabilizer cylinders are free from defects in material and workmanship for so long as they own the vehicle. Excluded from this warranty are the finish of the product and mounting bushings. Defects in material and workmanship do not include such things as dented cylinders or bent rods caused by obvious side impact, rust, worn or deformed bushings. A shock absorber is a wear item and over time will experience diminished damping resistance due to normal component wear. This is not a defect in material or workmanship and is therefore not warrantable.

BDS Suspension's obligation under all warranties is limited to the repair or replacement, at BDS's option, of the defective material. Any cost of removal, installation or reinstallation, freight charges, incidental or consequential damages are expressly excluded from these warranties.

INSTALLATION INSTRUCTIONS

1. **Note: Please read instructions thoroughly before installing shock absorber.**
2. Remove old shock absorber from vehicle. Note any spacers, washers, sleeves or other hardware and note their location. Compare the existing hardware with the supplied hardware. Always use new hardware wherever possible. Due to the variety of applications, you may not use any or all of the hardware supplied. You may need to use some of the original hardware. If any of the original hardware is damaged, corroded, bent or broken it must be replaced.
3. If installing dust boot, do so at this time. **Note: The use of a lubricant like dish soap on the inside of the boot will ease installation.** Make sure the washer at the top of the shock is fully seated in the boot all the way around. Secure the bottom of the boot to the cylinder with a plastic tie strap.
4. Install any required bushings and sleeves in to the shock eyes at this time. Install the shock absorber on the vehicle. Use the appropriate illustration as a frame of reference. Due to the different shock mounts within a vehicle model range, the shock eyes must be built to match the shocks that you removed by using the universal hardware kit included. Choose the sleeve with an I.D. closest to the O.D. of the mounting stud or bolt without binding. Some applications will require some extra effort to install.
5. Check all fasteners for tightness before driving and inspect periodically.

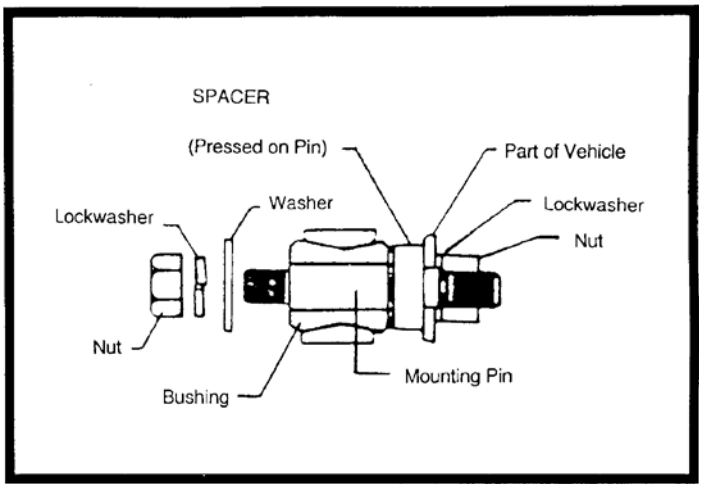

102 S. Michigan Avenue • Coldwater, MI 49036
517-279-2135 • www.bds-suspension.com

rev. 12/22/2005

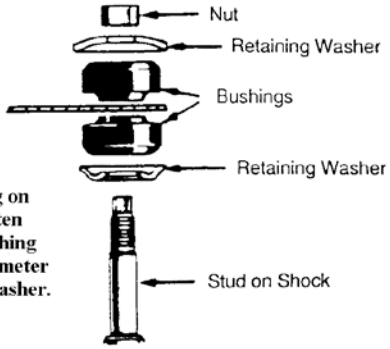

Note: Caution
When installing bushing on stem type shocks. Tighten only enough so that bushing are expanded to the diameter of the outer retaining washer.

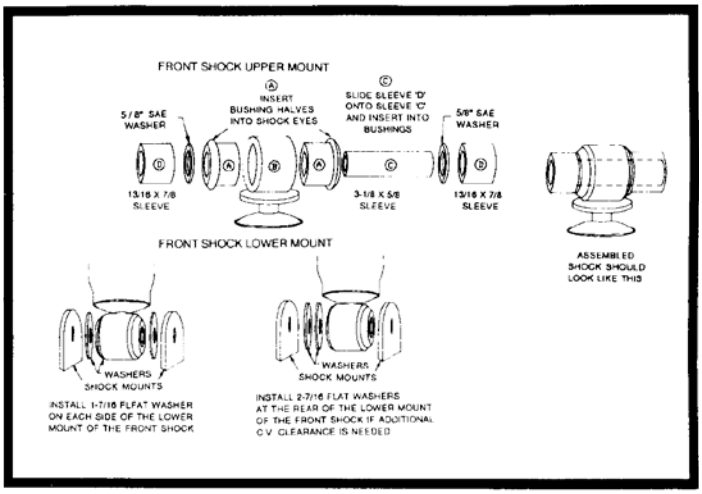

CHEV. S-SERIES W/LIFT

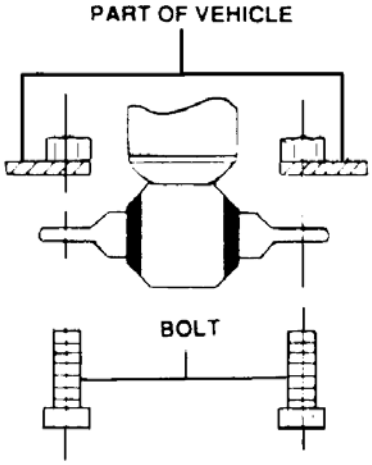

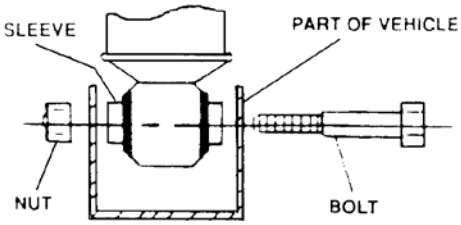

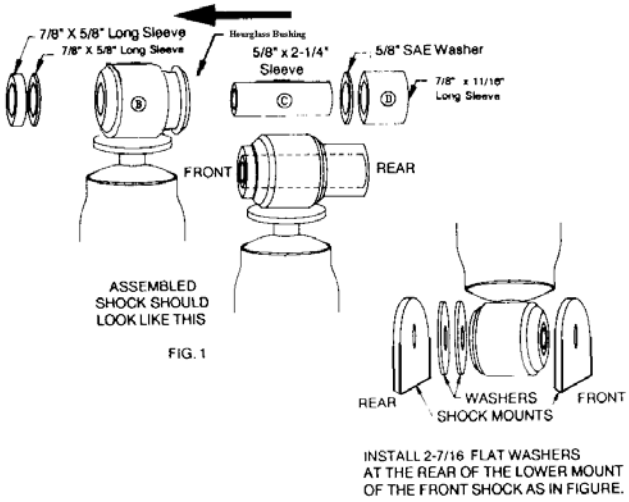

FULL-SIZE CHEV. W/LIFT 88-UP MODELS

INSTALLING BUSHINGS, SLEEVE AND BARPINS

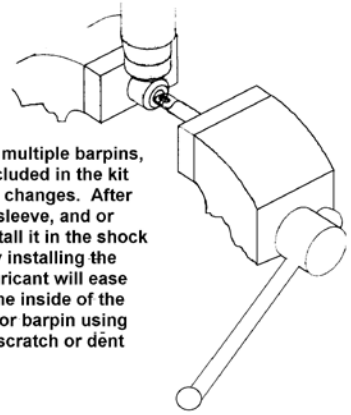

Some shock absorbers require multiple barpins, sleeves, and bushings to be included in the kit due to vehicle years and model changes. After choosing the correct bushing, sleeve, and or barpin for your application, install it in the shock eye. For best results, begin by installing the bushing in the shock eye. Lubricant will ease this process. Next, lubricate the inside of the bushing and install the sleeve or barpin using a bench vise. Use care not to scratch or dent the shock body.