#024200

Installation Instructions
Spring Spacer Kit
Jeep TJ

READ AND UNDERSTAND ALL INSTRUCTIONS AND WARNINGS PRIOR TO INSTALLATION OF SYSTEM AND OPERATION OF VEHICLE.

SAFETY WARNING

BDS Suspension Co. recommends this system be installed by a professional technician. In addition to these instructions, professional knowledge of disassembly/ reassembly procedures and post installation checks must be known.

PRODUCT SAFETY WARNING

Certain BDS Suspension products are intended to improve off-road performance. Modifying your vehicle for off-road use may result in the vehicle handling differently than a factory equipped vehicle. Extreme care must be used to prevent loss of control or vehicle rollover. Failure to drive your modified vehicle safely may result in serious injury or death. BDS Suspension Co. does not recommend the combined use of suspension lifts, body lifts, or other lifting devices.

You should never operate your modified vehicle under the influence of alcohol or drugs. Always drive your modified vehicle at reduced speeds to ensure your ability to control your vehicle under all driving conditions. Always wear your seat belt.

PRE-INSTALLATION NOTES

1. Special literature required: OE Service Manual for model/year of vehicle. Refer to manual for proper disassembly/reassembly procedures of OE and related components.
2. Adhere to recommendations when replacement fasteners, retainers and keepers are called out in the OE manual.
3. Larger rim and tire combinations may increase leverage on suspension, steering, and related components. When selecting combinations larger than OE, consider the additional stress you could be inducing on the OE and related components.
4. Post suspension system vehicles may experience drive line vibrations. Angles may require tuning, slider on shaft may require replacement, shafts may need to be lengthened or trued, and U-joints may need to be replaced.
5. Secure and properly block vehicle prior to installation of BDS Suspension components. Always wear safety glasses when using power tools.
6. If installation is to be performed without a hoist, BDS Suspension Co. recommends rear alterations first.
7. Due to payload options and initial ride height variances, the amount of lift is a base figure. Final ride height dimensions may vary in accordance to original vehicle attitude. Always measure the attitude prior to beginning installation.

POST-INSTALLATION WARNINGS

1. Check all fasteners for proper torque. Check to ensure for adequate clearance between all rotating, mobile, fixed, and heated members. Verify clearance between exhaust and brake lines, fuel lines, fuel tank, floor boards and wiring harness. Check steering gear for clearance. Test and inspect brake system.
2. Perform steering sweep to ensure front brake hoses have adequate slack and do not contact any rotating, mobile or heated members. Inspect rear brake hoses at full extension for adequate slack. Failure to perform hose check/ replacement may result in component failure. Longer replacement hoses, if needed can be purchased from a local parts supplier.
3. Perform head light check and adjustment.
4. Re-torque all fasteners after 500 miles. Always inspect fasteners and components during routine servicing.

102 S. Michigan Avenue • Coldwater, MI 49036
517-279-2135 • www.bds-suspension.com

rev. 7/10/2006

PARTS LIST

Description	Qty
2” Plastic Bump Stop	2
Urethane Coil Spacer	4
Warning Label	1
Sleeve .875 O.D. x 1.95”	2
10mm x 80 mm Bolt	4

INSTALLATION INSTRUCTIONS

A. FRONT SYSTEM INSTALLATION

1. Raise and support vehicle.

a. Place hydraulic jack under the axle to support it.

2. Remove the OE front coils.

a. Paint and scribe alignment marks on the cam adjuster and axle bracket as shown in figure 1.

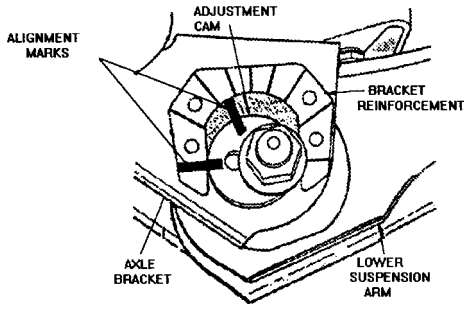

b. Mark & disconnect the propeller shaft from the axle.

1. Paint or scribe alignment marks on the yolk at the axle pinion as shown in figure 2.

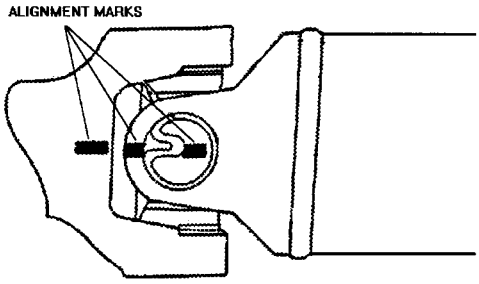

2. Remove the U-joint strap bolts and the U-joint straps from the axle pinion.

c. Remove the lower suspension arm nut, cam, and cam bolts from the axle as shown in figure 3.

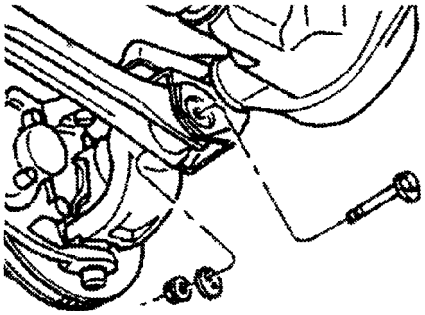

d. Disconnect the stabilizer bar links from the axle.

e. Remove the shocks.

f. Disconnect the track bar from the frame rail bracket.

1. Remove the cotter pin.
2. Remove the nut.
3. Use a universal puller tool to separate the ball stud from the bracket.

g. Disconnect the drag link from the pitman arm.

1. Remove the cotter pin.
2. Remove the nut.
3. Remove the drag link ball stud from the pitman arm using a puller.

h. Lower the axle until the spring is free from its upper mount.

3. Install the front assembly.

a. Remove the OE bump stop.

1. Pull rubber bumper from the metal pocket. Remove the center bolt retaining the OE pocket. Install 2” plastic block between OE pocket and its mount using the 10mm bolt supplied. Install rubber stop pack in to pocket.

b. Install the BDS coil spacer over the bump stop pocket and up into the mount with the lip of the spacer down as shown in figure 4.

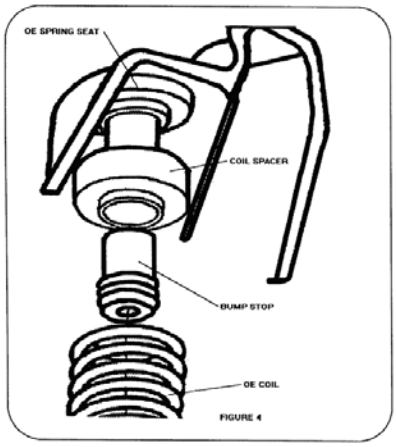

d. Raise the axle until the spring seats on the coil spacer, then raise it two more inches.

e. Connect the stabilizer bar links. Torque to 70 ft. lbs.

f. Connect the correct BDS shocks at this time.

g. Connect the track bar to the frame rail. **Note: It may be necessary to pry the axle assembly over in order to install the track bar.**

1. Install the ball stud into the frame rail bracket.
2. Install the retaining nut on the stud.
   a. Torque to 65 lbs.
3. Install new cotter pin.

   Note: Always tighten the nut in order to align the cotter pin hole, never loosen.

h. Install the lower suspension arm in the axle bracket.

1. Position the lower suspension arm in the axle

bracket.

2. Install cam bolts, cam, and nut.
   a. Finger tighten only, **DO NOT TIGHTEN AT THIS TIME.**

i. Install the front propeller shaft onto the axle pinion.
   1. Position the propeller shaft with the reference marks aligned.
   2. Replace the U-joint straps and the strap bolts. Torque to 14 lbs.

j. Install the drag link to the pitman arm.
   1. Install the drag link ball stud into the pitman arm.
   2. Install the nut & torque to 60 lbs.
   3. Install a new cotter pin as described previously.

k. Remove the supports and lower the vehicle to the ground.

l. Torque the lower control arm pivots at the axle.
   1. Align the marks you painted or scribed and torque to 85 lbs.

B. REAR SYSTEM INSTALLATION

1. Raise and support the vehicle.

a. Place a hydraulic jack under the axle to support it.

2. Remove the rear coils.

a. Disconnect the stabilizer bar links from the axle brackets.

b. Remove the shock absorbers.

c. Disconnect the track bar from the frame rail bracket.
   1. Remove the bolt and nut from the frame rail bracket.

d. Lower the axle until the spring is free from the upper mount.

3. Install the rear assembly.

a. Remove the OE bump stop.
   1. Pull the rubber bumper out of the metal pocket.
   2. Unbolt pocket from the spring seat.

b. Install BDS coil spacer into the upper mount with the lip of the spacer down.

   Note: On a Grand Cherokee ZJ it will be necessary to trim the spacers. There is a protruding lip where the floor pan attaches to the wheel well. The spacer must be trimmed to clear this obstruction.

c. Re-install factory bump stop onto the spring pocket, using the sleeve and 10 mm bolts provided to relocate the OE bump stop and replace the OE rubber bumper.

d. Raise the axle into position until the spring seats in the coil spacer.

e. Connect the stabilizer bar links and torque to 40 lbs.

f. Install correct BDS shocks at this time.

g. Connect the track bar to the frame rail bracket.

   Note: It may be necessary to pry the axle assembly over to install the track bar.

   1. Install the track bar into the frame rail bracket.

   2. Loosely install nut and bolt. Do not tighten at this time.

h. Remove the supports and lower the vehicle.

i. Torque all remaining fasteners.

j. Torque lower shock mounts to 74 lbs

k. Torque the track bar to 74 lbs

C. INSTALL WARNING LABEL

1. Install warning label in a highly visible location inside the cab of the vehicle.

Shock Absorber

Installation Instructions

READ AND UNDERSTAND ALL INSTRUCTIONS AND WARNINGS PRIOR TO INSTALLATION OF SYSTEM AND OPERATION OF VEHICLE.

LIMITED LIFETIME WARRANTY

BDS Suspension Co. warrants to the original retail purchaser that its shock and stabilizer cylinders are free from defects in material and workmanship for so long as they own the vehicle. Excluded from this warranty are the finish of the product and mounting bushings. Defects in material and workmanship do not include such things as dented cylinders or bent rods caused by obvious side impact, rust, worn or deformed bushings. A shock absorber is a wear item and over time will experience diminished damping resistance due to normal component wear. This is not a defect in material or workmanship and is therefore not warrantable.

BDS Suspension's obligation under all warranties is limited to the repair or replacement, at BDS's option, of the defective material. Any cost of removal, installation or reinstallation, freight charges, incidental or consequential damages are expressly excluded from these warranties.

INSTALLATION INSTRUCTIONS

1. **Note: Please read instructions thoroughly before installing shock absorber.**
2. Remove old shock absorber from vehicle. Note any spacers, washers, sleeves or other hardware and note their location. Compare the existing hardware with the supplied hardware. Always use new hardware wherever possible. Due to the variety of applications, you may not use any or all of the hardware supplied. You may need to use some of the original hardware. If any of the original hardware is damaged, corroded, bent or broken it must be replaced.
3. If installing dust boot, do so at this time. **Note: The use of a lubricant like dish soap on the inside of the boot will ease installation.** Make sure the washer at the top of the shock is fully seated in the boot all the way around. Secure the bottom of the boot to the cylinder with a plastic tie strap.
4. Install any required bushings and sleeves in to the shock eyes at this time. Install the shock absorber on the vehicle. Use the appropriate illustration as a frame of reference. Due to the different shock mounts within a vehicle model range, the shock eyes must be built to match the shocks that you removed by using the universal hardware kit included. Choose the sleeve with an I.D. closest to the O.D. of the mounting stud or bolt without binding. Some applications will require some extra effort to install.
5. Check all fasteners for tightness before driving and inspect periodically.

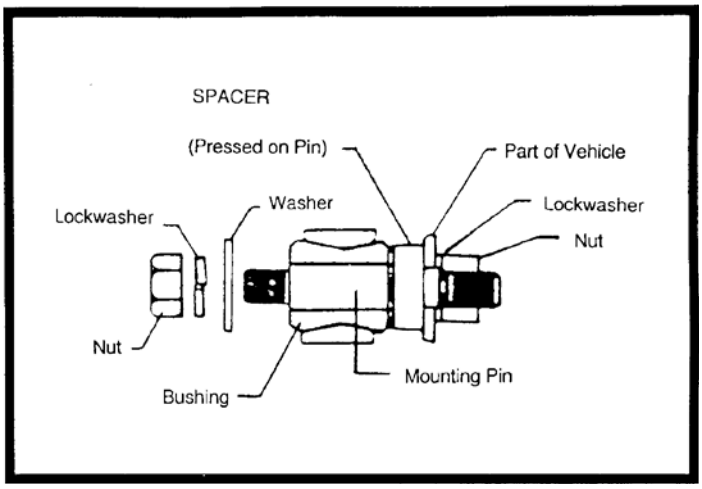

102 S. Michigan Avenue • Coldwater, MI 49036
517-279-2135 • www.bds-suspension.com

rev. 12/22/2005

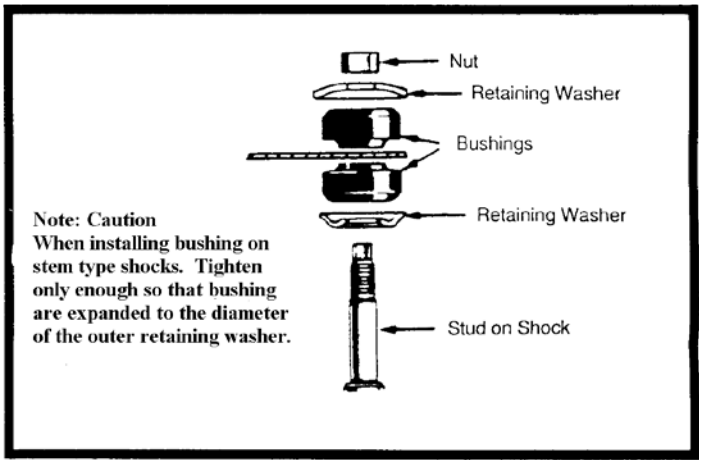

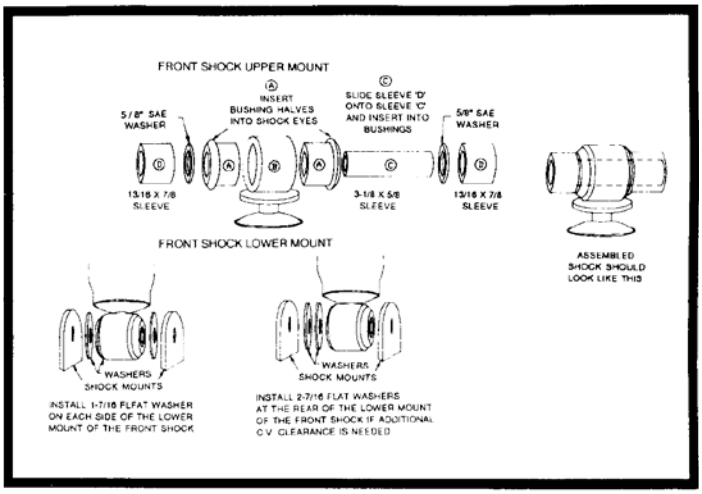

CHEV. S-SERIES W/LIFT

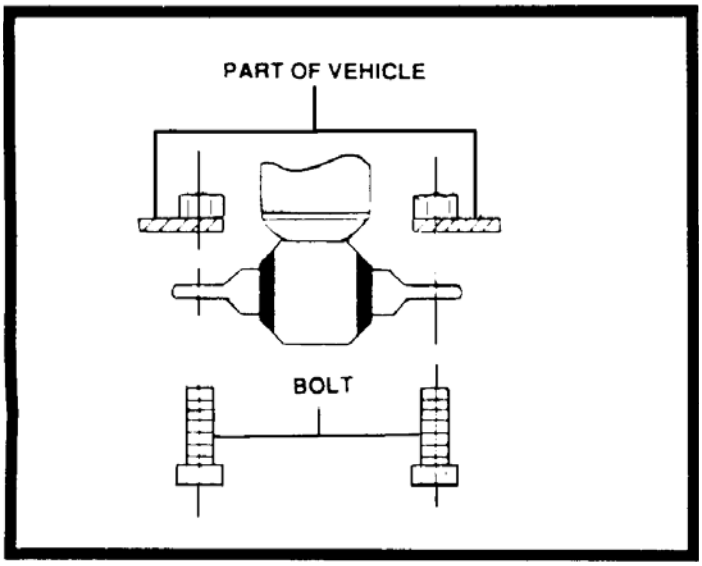

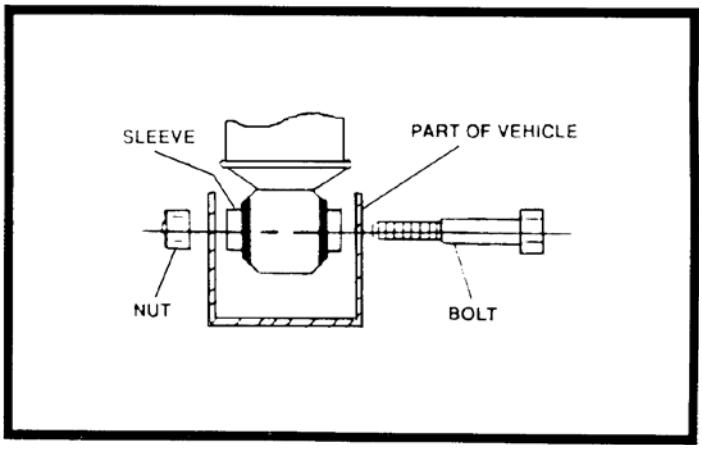

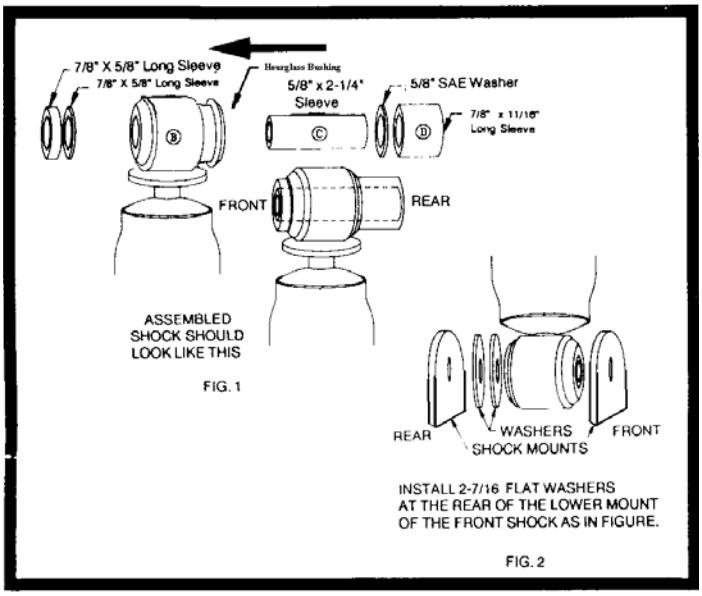

FULL-SIZE CHEV. W/LIFT 88-UP MODELS

INSTALLING BUSHINGS, SLEEVE AND BARPINS

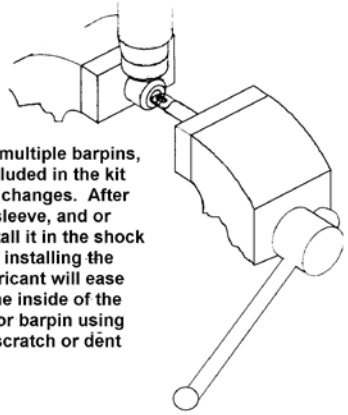

Some shock absorbers require multiple barpins, sleeves, and bushings to be included in the kit due to vehicle years and model changes. After choosing the correct bushing, sleeve, and or barpin for your application, install it in the shock eye. For best results, begin by installing the bushing in the shock eye. Lubricant will ease this process. Next, lubricate the inside of the bushing and install the sleeve or barpin using a bench vise. Use care not to scratch or dent the shock body.